Gas detector

Belimo's gas monitoring devices offer an intelligent peer-to-peer communication protocol that gives users unparalleled flexibility to configure and install a complete ventilation control system with only one monitor or dozens operating in multiple ventilation zones. With field-replaceable sensing elements, on-demand ventilation, stand-alone installation, integrated and lockable LCDs, Belimo's gas monitoring devices are an ideal choice for any application involving vehicle exhaust.

2

2-year warranty

Type Overview

Type	Measured values	Number of relays	Output signal active gas	Communication
EXT-OP-6014-A	NO_2	1	2x 2...10 V, 2x 4...20 mA	CAN bus, BACnet MS/TP
EXT-OP-6014-B	NO_2	2	-	CAN bus, BACnet MS/TP
EXT-OP-6014-C	NO_2	0	-	CAN bus

Technical data

Electrical Data	Nominal voltage	AC/DC 24 V
	Nominal voltage frequency	50/60 Hz
	Nominal voltage range	AC 17...28 V / DC 17...28 V
	Power consumption AC	5 VA
	Power consumption DC	5 W
	Cable entry	2 top, 2 bottom, 1 rear – 1/2" EMT
	Cable specification	1 pair twisted shielded 24...18AWG
	Fuse	Thermal PTC, auto-reset
Functional Data	Application	air
	Communication	CAN bus BACnet MS/TP
	Output signal active note	2...10 V or 4...20 mA output, selectable with jumper
	Output signal relay note	1 x SPDT, max. 1.5 A (0.4 A inductive), AC 250 V
	Mounting	Half the height of the room
	Max. altitude	6562 ft [2000 m] above sea level
	Coverage area	Radius: 15 m [50 ft] Area: 700 m^2 [7500 ft^2] There can be no obstructions such as walls, stairs, elevators, shelving with solid fill, tool chests, etc.
	Display	LCD, with backlight, Gas concentration, system status
	Response time	<30 s (T90)
	Alarm	Audible alarm, 85 db @ 1 m [3.3 ft]
Measuring Data	Measured values	NO_2
	Measuring range gas	0...10 ppm
	Long-term stability	<2% per month
	Measurement Repeatability	<+2% NO_2 equivalent

Materials	Housing	Flame resistant polycarbonate ABS UL-94-V0 and UL-94-5VA for indoor use
Safety Data	Ambient humidity	Max. 80% RH, non-condensing
	Ambient temperature	-20...40°C [-4...104°F]
	Protection class IEC/EN	II, reinforced insulation
	Protection class UL	II, reinforced insulation
	Certification UL	CAN/CSA 205-2017, CAN/CSA 22.2 No. 152, BTL
	Pollution degree	2

Accessories

	Description	Type
Spare parts	Replacement sensor module NO_2 (Nitrogen Dioxide), 0...10 ppm, Electro-chemical	EXT-OP-5514
Communication module	Communication module, CAN bus, BACnet MS/TP, 1 x SPDT, max. 1.5 A (0.4 A inductive), AC 250 V	EXT-OP-6000-A
	Communication module, CAN bus, BACnet MS/TP, 2 x SPDT, max. 1.5 A (0.4 A inductive), AC 250 V	EXT-OP-6000-B
	Communication module, CAN bus	EXT-OP-6000-C
	Communication module, Ventilated cover, CAN bus, BACnet MS/TP, 2 x SPDT, max. 1.5 A (0.4 A inductive), AC 250 V	EXT-OP-6000-BVC
Calibration gas mixture	Calibration gas bottle, 103 L	EXT-OP-Gas-N2
	Calibration gas bottle NO_2 (Nitrogen Dioxide), 0...5 ppm, 58 L	EXT-OP-Gas-NO2
Mechanical accessories	Alarm horn	EXT-OP-5000-AL
	Splash guard, Wall mount	EXT-OP-6000-BT
	Splash guard, Duct mount	EXT-OP-6000-GN

Wiring Diagram

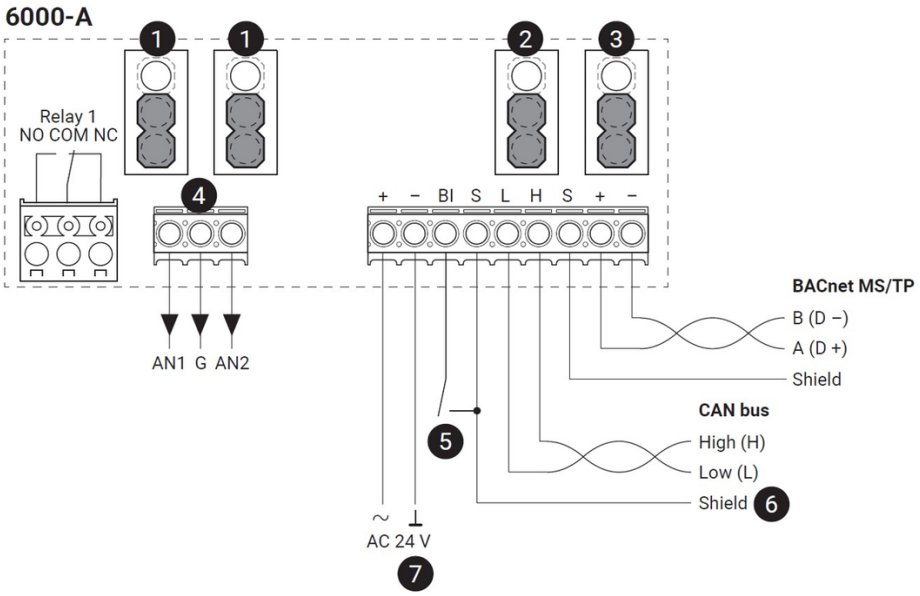

1 Down position: 2...10 V (factory setting)
Up position: 4...20 mA

2 End of line (EOL) jumper: CAN bus
Down position: Termination OFF (factory setting)
Up position: Termination ON (first and last unit only should have this jumper in the up position)

3 End of line (EOL) jumper: BACnet MS/TP
Down position: Termination OFF (factory setting)
Up position: Termination ON (first and last unit only should have this jumper in the up position)

4 Analogue output

5 Binary input to limit switch

6 Shield connected at the 1st unit only, at others only looped through

7 No connection to the ground

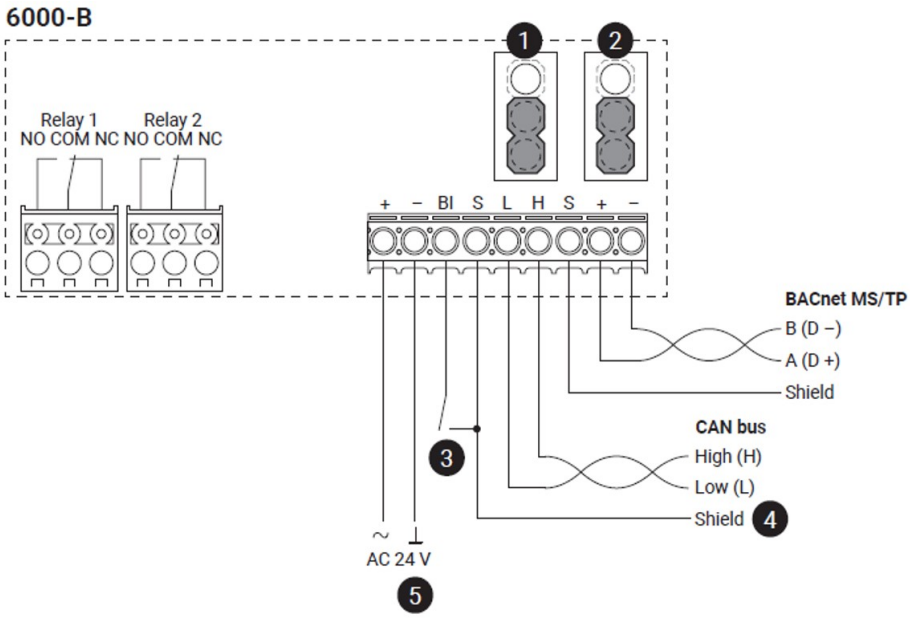

1. End of line (EOL) jumper: CAN bus
   Down position: Termination OFF (factory setting)
   Up position: Termination ON (first and last unit only should have this jumper in the up position)

2. End of line (EOL) jumper: BACnet MS/TP
   Down position: Termination OFF (factory setting)
   Up position: Termination ON (first and last unit only should have this jumper in the up position)

3. Binary input to limit switch

4. Shield connected at the 1st unit only, at others only looped through

5. No connection to the ground

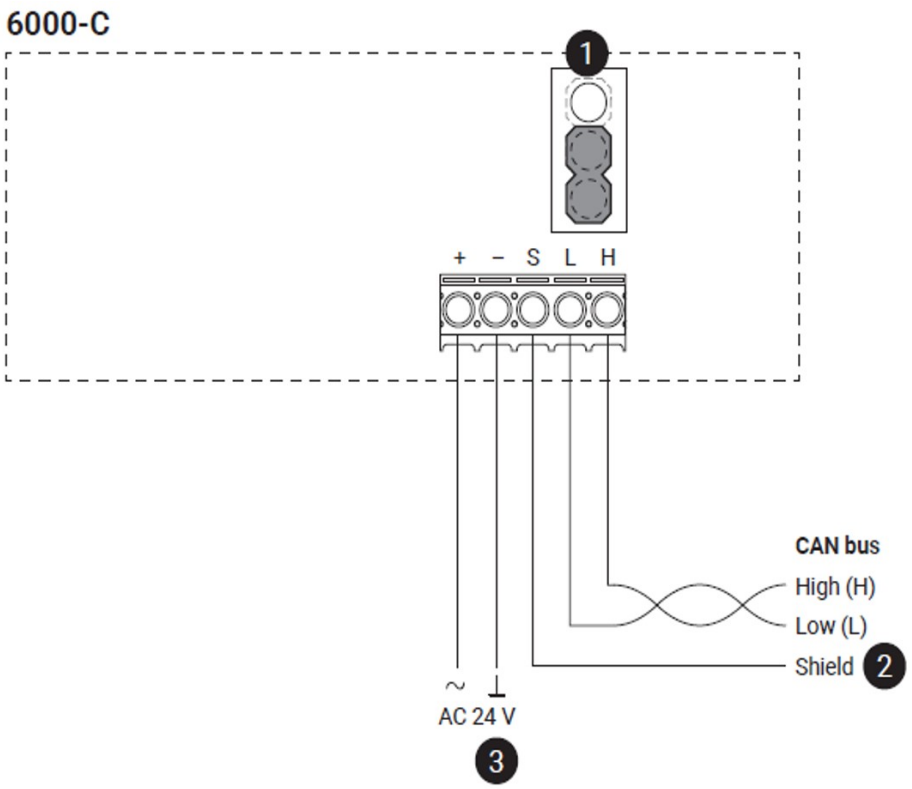

1 End of line (EOL) jumper: CAN bus
Down position: Termination OFF (factory setting)
Up position: Termination ON (first and last unit only should have this jumper in the up position)

2 Shield connected at the 1st unit only, at others only looped through

3 No connection to the ground

Wiring CAN bus

CAN bus

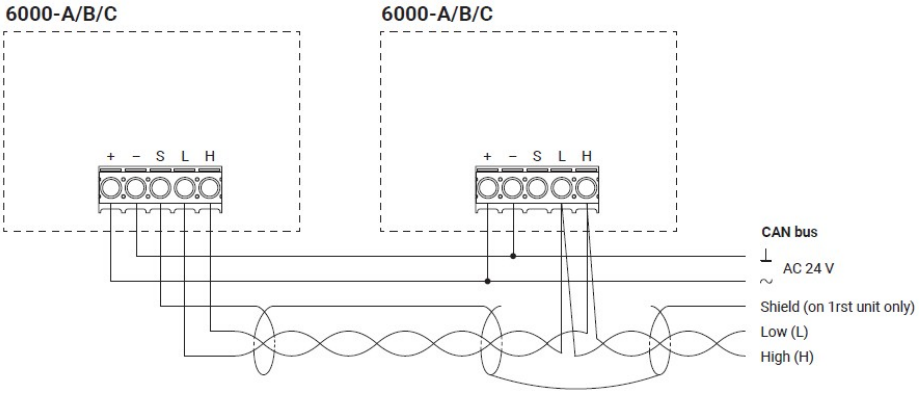

Wiring RS485 BACnet MS/TP

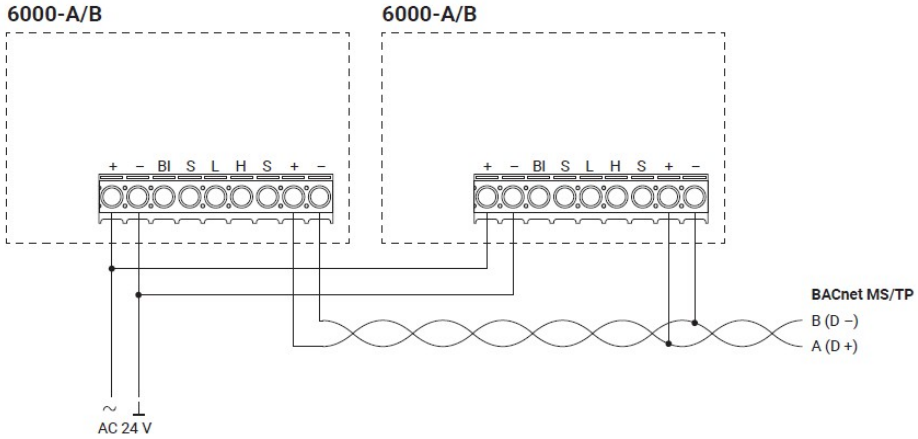

Dimensions

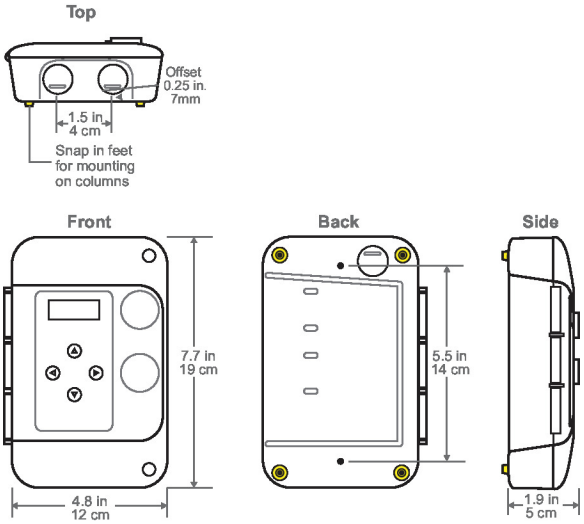

Type	Weight
EXT-OP-6014-A	0.95 lb [0.43 kg]
EXT-OP-6014-B	0.95 lb [0.43 kg]
EXT-OP-6014-C	0.95 lb [0.43 kg]