Energy metering pressure independent control valve that optimizes, documents and proves water coil performance in chilled and hot water systems.

- Nominal voltage AC/DC 24 V
- Control modulating, communicative, Hybrid, Cloud
- Measures Energy
- Controls Power
- Manages Delta T

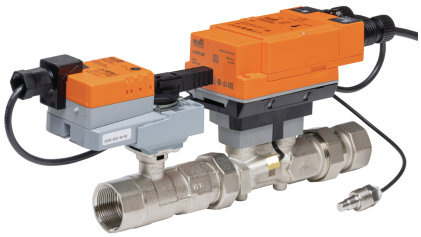

5-year warranty

Structure

Components

The Belimo Energy Valve consists of a characterized control valve, an actuator and a thermal energy meter with a logic and a sensor module.

The logic module provides the power supply, the communication interface and the NFC connection of the energy meter. All relevant data are measured and recorded in the sensor module.

This modular design of the energy meter means that the logic module can remain in the system if the sensor module is replaced.

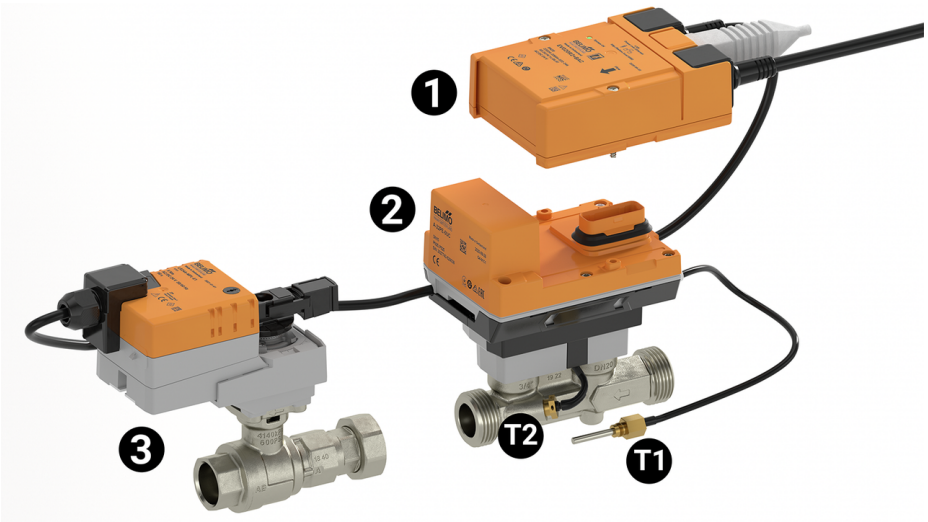

External temperature sensor T1
Integrated temperature sensor T2
Logic module 1
Sensor module 2
Characterized control valve with actuator 3

Technical data

Electrical data

Nominal voltage	AC/DC 24 V
Nominal voltage frequency	50/60 Hz
Power consumption in operation	4 W
Connection Ethernet	RJ45 socket
Power over Ethernet PoE	DC 37...57 V 11 W (PD13W)
Conductors, cables	24 AC/DC, cable length <330 ft [<100 m], no shielding or twisting required Shielded cables are recommended for supply via PoE

Data bus communication	Communicative control	BACnet IP, BACnet MS/TP Modbus TCP, Modbus RTU MP-Bus Cloud
	Number of nodes	Max. 32 (without repeater)
	Conductors, cables	24 AC/DC, cable length <330 ft [<100 m], no shielding or twisting required Shielded cables are recommended for supply via PoE
Functional data	Valve size [mm]	0.5" [15]
	Operating range Y	2...10 V
	Operating range Y note	4...20 mA w/ ZG-R01 (500 Ω, 1/4 W resistor)
	Input Impedance	100 kΩ (0.1 mA), 500 Ω
	Options positioning signal	VDC variable
	Position feedback U	2...10 V
	Position feedback U variable	VDC variable
	Running Time (Motor)	90 s
	Sound power level Motor	dB(A)
	Control accuracy	±5%
	Min. controllable flow	1% of V'nom
	Fluid	chilled or hot water, up to 60% glycol max (open loop/steam not allowed)
	Fluid Temp Range (water)	14...250°F [-10...120°C]
	Close-off pressure Δps	200 psi
	Differential Pressure Range	5...50 psi or 1...50 psi see flow reductions chart in tech doc
	Flow characteristic	equal percentage or linear
	Body Pressure Rating	360 psi
	GPM	6.6
	Angle of rotation note	adjustable with mechanical stop
	Servicing	maintenance-free
	Manual override	external push button
Measuring data	Measured values	Flow Temperature
	Temperature sensor T1 / T2	Pt1000 - EN60751, 2 conductor technology, inseparably connected Cable length external sensor T1: 10ft [3m]
Flow measurement	Measuring accuracy flow	±2%*
	Measurement Repeatability	±0.5% (Flow)
	Sensor Technology	Ultrasonic with glycol and temperature compensation
Temperature measurement	Measuring accuracy temperature difference	±0.18 K @ ΔT = 10 K ±0.23 K @ ΔT = 20 K
	Resolution	0.05°C
	Remote Temperature Sensor Length	Standard: 2 ft. 7.5 in. [0.8m], 9.8 ft. [3m]
Safety data	Degree of protection IEC/EN	IP54
	Degree of protection NEMA/UL	NEMA 1
	Enclosure	UL Enclosure Type 1

Safety data	Agency Listing	cULus acc. to UL60730-1A/-2-14, CAN/CSA E60730-1:02, CE acc. to 2014/30/EU and 2014/35/EU; Listed to UL 2043 - suitable for use in air plenums per Section 300.22(c) of the NEC and Section 602.2 of the IMC
	Quality Standard	ISO 9001
	Ambient temperature	-22...122°F [-30...50°C]
	Storage temperature	-40...176°F [-40...80°C]
	Ambient humidity	Max. 95% RH, non-condensing
Materials	Valve body	Nickel-plated brass body
	Flow measuring pipe	brass body nickel-plated
	Spindle	stainless steel
	Spindle seal	EPDM (lubricated)
	Characterized disc	TEFZEL®
	Seat	PTFE
	Pipe connection	NPT female ends
	O-ring	EPDM
	Ball	stainless steel

Safety notes

- This device has been designed for use in stationary heating, ventilation and air-conditioning systems and must not be used outside the specified field of application, especially in aircraft or in any other airborne means of transport.
- Outdoor application: only possible in case that no (sea) water, snow, ice, insolation or aggressive gases interfere directly with the actuator and that is ensured that the ambient conditions remain at any time within the thresholds according to the data sheet.
- Only authorized specialists may carry out installation. All applicable legal or institutional installation regulations must be complied during installation.
- The device contains electrical and electronic components and must not be disposed of as household refuse. All locally valid regulations and requirements must be observed.

Product features

Product features

The Energy Valve measures energy using its built-in electronic flow sensor and supply and return temperature sensors. Controls power with its power control logic providing linear heat transfer regardless of temperature and pressure variations. Manages low delta-T with its built in Delta-T manager. Measures glycol with advanced algorithms in its built in flow sensor. An IoT device utilising cloud-based technology to optimise performance.

Application

Water-side control of heating and cooling systems for AHUs and water coils.

Operation

The Energy Valve is an energy metering pressure independent control valve that measures, documents and optimises water coil performance.

Product features

Mode of operation

The HVAC performance device is comprised of four components: characterized control valve (CCV), measuring pipe with volumetric flow sensor, temperature sensors and the actuator itself. The adjusted maximum flow (V'max) is assigned to the maximum control signal DDC (typically 10 V / 100%). Alternatively, the control signal DDC can be assigned to the valve opening angle or to the power required on the heat exchanger (see power control). The HVAC performance device can be controlled via communicative or analogue signals. The fluid is detected by the sensor in the measuring pipe and is applied as the flow value. The measured value is balanced with the setpoint. The actuator corrects the deviation by changing the valve position. The angle of rotation α varies according to the differential pressure through the control element (see flow rate curves).

Flow measurement

*All flow tolerances are at 68°F [20°C] & water.

Accessories

Spare parts	Description	Type
	T-piece with thermowell DN 1/2" [15]	A-22PE-A09
	T-piece with thermowell DN 3/4" [20]	A-22PE-A10
	T-piece with thermowell DN 1" [25]	A-22PE-A11
	T-piece with thermowell DN 1 1/4" [32]	A-22PE-A12
	T-piece with thermowell DN 1 1/2" [40]	A-22PE-A13
	T-piece with thermowell DN 2" [50]	A-22PE-A14

Service tools	Description	Type
	Converter Bluetooth / NFC	ZIP-BT-NFC

Electrical installation

Supply from isolating transformer.

Parallel connection of other actuators possible. Observe the performance data.

The wiring of the line for BACnet MS/TP / Modbus RTU is to be carried out in accordance with applicable RS485 regulations.

Modbus / BACnet: Supply and communication are not galvanically isolated. Connect earth signal of the devices with one another.

Sensor connection: An additional sensor can optionally be connected to the thermal energy meter. This can be a passive resistance sensor Pt1000, Ni1000, NTC10k (10k2), an active sensor with output DC 0...10 V or a switching contact. Thus the analogue signal of the sensor can be easily digitised with the thermal energy meter and transferred to the corresponding bus system.

Analog output: An analog output is available on the thermal energy meter. This can be selected as DC 0...10 V, DC 0.5...10 V or DC 2...10 V. For example, the flow rate or the temperature of the temperature sensor T1 / T2 can be output as an analog value.

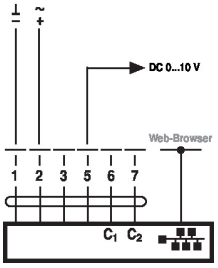

Cable colors:
1 = black, GND
2 = red, AC/DC 24 V
3 = white, Sensor optional
5 = orange, DC 0...10 V, MP-Bus
6 = pink, C1 = D- = A
7 = grey, C2 = D+ = B

BACnet IP / Modbus TCP

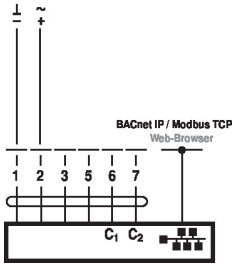

PoE with BACnet IP / Modbus TCP

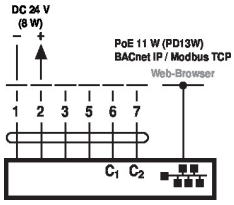

BACnet MS/TP / Modbus RTU

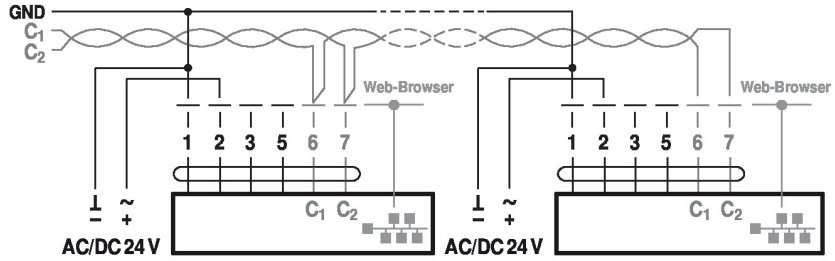

C_1 = D- = A
C_2 = D+ = B

Connection with active sensor

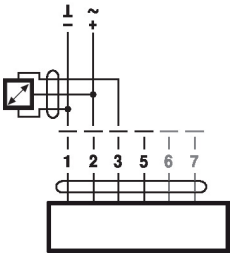

Connection with switching contact

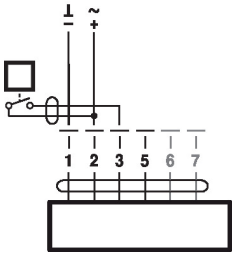

Connection with passive sensor

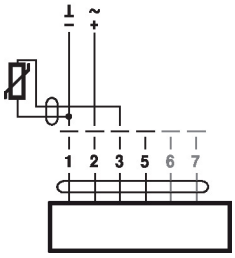

Functions

Functions with specific parameters (Parametrisation necessary)

MP-Bus, supply via 3-wire connection

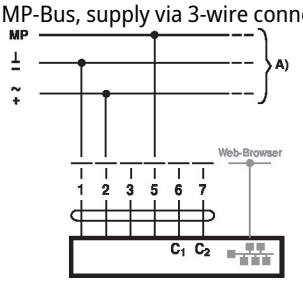

A) additional MP-Bus nodes (max. 8)

MP-Bus via 2-wire connection, local power supply

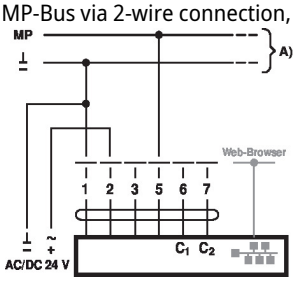

A) additional MP-Bus nodes (max. 8)

M-Bus with converter

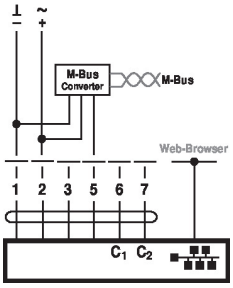

M-Bus with converter in parallel mode with BACnet IP / Modbus TCP

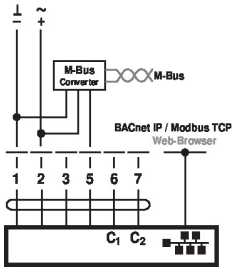

M-Bus with converter in parallel mode with PoE with BACnet IP / Modbus TCP

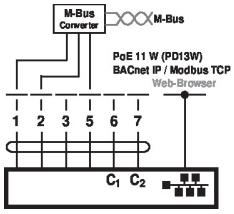

Override control and limiting with DC 24 V with relay contacts (with conventional control or hybrid mode)

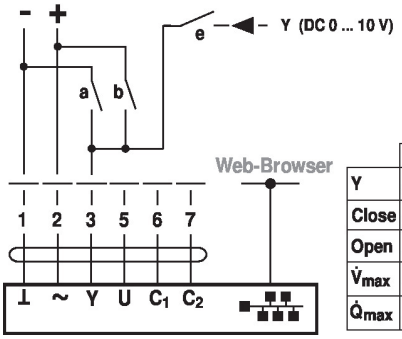

	a	b	e	
Y	⁄	⁄	⁄	
Close	⁄	⁄	⁄	
Open	⁄	⁄	⁄	1)
$\dot{V}_{max}$	⁄	⁄	⁄	2)
$\dot{Q}_{max}$	⁄	⁄	⁄	3)

1) Position control
2) Flow control
3) Power control

Installation notes

Recommended installation positions

The ball valve can be installed upright to horizontal. The ball valve may not be installed in a hanging position, i.e. with the spindle pointing downwards.

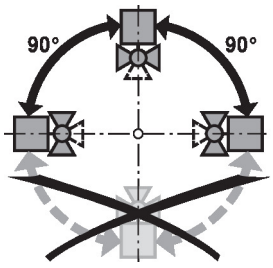

Installation position in return

Installation in the return is recommended.

Water quality requirements

The water quality requirements specified in VDI 2035 must be adhered to.

Belimo valves are regulating devices. For the valves to function correctly in the long term, they must be kept free from particle debris (e.g. welding beads during installation work). The installation of a suitable strainer is recommended.

Servicing

Ball valves, rotary actuators and sensors are maintenance-free.

Before any service work on the final controlling device is carried out, it is essential to isolate the rotary actuator from the power supply (by unplugging the electrical cable if necessary). Any pumps in the part of the piping system concerned must also be switched off and the appropriate slide valves closed (allow all components to cool down first if necessary and always reduce the system pressure to ambient pressure level).

The system must not be returned to service until the ball valve and the rotary actuator have been correctly reassembled in accordance with the instructions and the pipeline has been refilled by professionally trained personnel.

Flow direction

The direction of flow, specified by an arrow on the housing, is to be complied with, since otherwise the flow rate will be measured incorrectly.

Cleaning of pipes

Before installing the thermal energy meter, the circuit must be thoroughly rinsed to remove impurities.

Prevention of stresses

The energy meter must not be subjected to excessive stress caused by pipes or fittings.

Inlet section

In order to achieve the specified measuring accuracy, a flow-calming section or inflow section in the direction of the flow is to be provided upstream from the flow sensor. Its dimensions should be at least 5x DN.

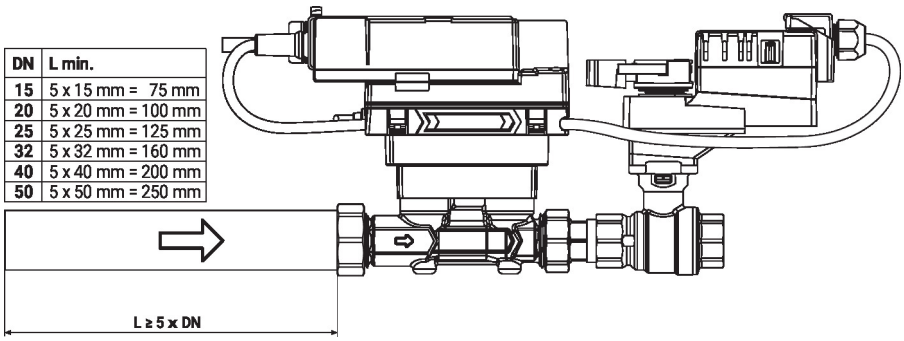

DN	L min.
15	5 x 15 mm = 75 mm
20	5 x 20 mm = 100 mm
25	5 x 25 mm = 125 mm
32	5 x 32 mm = 160 mm
40	5 x 40 mm = 200 mm
50	5 x 50 mm = 250 mm

Dimensions

Dimensional drawings

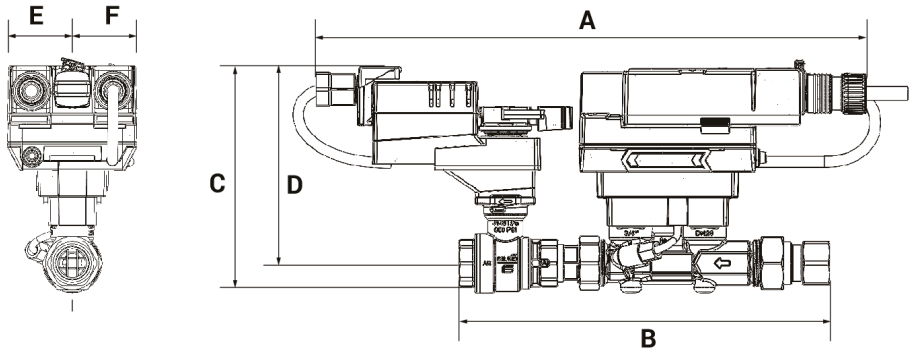

A	B	C	D	E	F
14.0" [356]	8.8" [224]	6.1" [154]	5.4" [137]	1.8" [46]	1.8" [46]