F7125VIC Technical Data Sheet
Pressure Enhanced Rubber Seat

5-year warranty

Application
These valves are designed to meet the needs of HVAC and commercial applications requiring bubble tight shut-off for liquids. Typical applications include chiller isolation, cooling tower isolation, change-over systems, large air handler coil control, bypass and process control applications. The large Cv values provide for an economical control valve solution for larger flow applications. Designed for use in Victaulic® piping systems.

Jobsite Note
Valve assembly should be stored in a weather protected area prior to installation. Reference the butterfly valve installation instruction for additional information.

Flow/Cv

Cv 30°	Cv 40°	Cv 50°	Cv 60°	Cv 70°	Cv 90°
70	140	240	370	620	1200

Suitable Actuators

	Non-Spring	Spring
F7125VIC	PRB(X)	PKRB(X)

Technical Data

Fluid	chilled or hot water, up to 60% glycol
Flow characteristic	modified linear
Controllable flow range	90° rotation
Valve Size [mm]	5” [125]
Pipe connection	grooved ANSI/AWWA (c606)
Housing	Ductile cast iron ASTM A536
Body finish	black alkyd enamel
Stem	416 stainless steel
Spindle bearing	fiberglass with TFE lining
Seat	EPDM
Disc	electroless nickel coated ductile iron
Body Pressure Rating	ANSI Class Grooved AWWA, 300 psi
ANSI Class	Grooved AWWA
Close-off pressure Δps	200 psi
Rangeability Sv	100:1
Maximum Velocity	20 FPS
Cv	1200
Weight	61.7 lb [28 kg]
Fluid Temp Range (water)	-22...250°F [-30...120°C]
Leakage rate	0%
Servicing	maintenance-free

Close-off pressures are variable and actuator dependent, consult Select Pro and/or Price Guide for specifics.

Dimensions (Inches [mm])

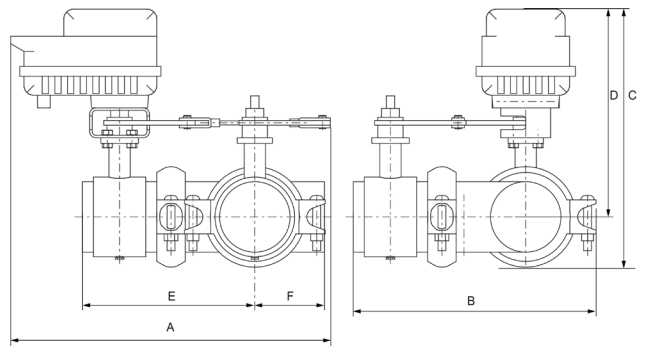

PK

A	B	C	D	E	F
25.3” [643]	19.2” [488]	19.8” [502]	16.4” [417]	13.6” [345]	5.5” [140]

Flow/Mounting Details

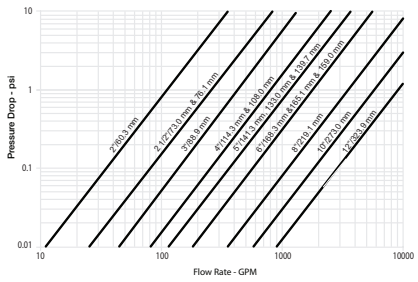

Date created, 02/27/2020 - Subject to change. © Belimo Aircontrols (USA), Inc.

Dimensions (Inches [mm])

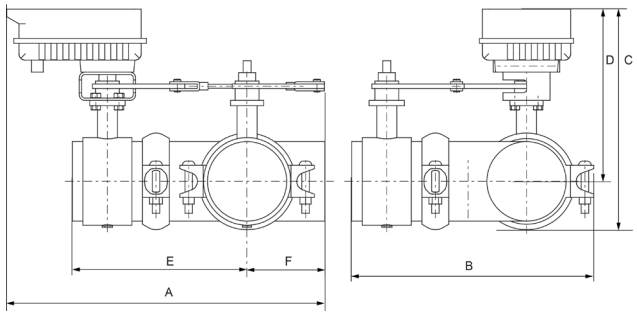

PRB(X)

A	B	C	D	E	F
25.1” [638]	19.2” [488]	17.2” [438]	13.9” [354]	13.6” [345]	5.5” [140]

Date created, 02/27/2020 - Subject to change. © Belimo Aircontrols (USA), Inc.

PRXUP-MFT-T Technical Data Sheet

Modulating, Non Fail-Safe, 24…240 V, NEMA 4X with BACnet

Technical Data	
Power Supply	24...240 VAC, -20% / +10%, 50/60 Hz, 24...125 VDC, -20% / +10%
Power consumption in operation	20 W
Power consumption in rest position	6 W
Transformer sizing	20 VA @ AC/DC 24 V (class 2 power source), 23 VA @ AC/DC 120 V, 52 VA @ AC 230 V
Electrical Connection	Terminal blocks, (PE) Ground-Screw
Overload Protection	electronic thoughout 0...90° rotation
Operating Range	2...10 V (default), 4...20 mA, variable (VDC, on/off, floating point)
Operating range Y variable	Start point 0.5...30 V End point 2.5...32 V
Input Impedance	100 kΩ for 2...10 V (0.1 mA), 500 Ω for 4...20 mA, 1500 Ω for On/Off
Position Feedback	2...10 V, Max. 0.5 mA, VDC variable
Angle of rotation	90°
Torque motor	1400 in-lb [160 Nm]
Direction of motion motor	reversible with app
Position indication	top mounted domed indicator
Manual override	7 mm hex crank, supplied
Running Time (Motor)	default 35 s, variable 30...120 s
Ambient humidity	max. 95% r.H., non-condensing
Ambient temperature	-22...122°F [-30...50°C]
Storage temperature	-40...176°F [-40...80°C]
Degree of Protection	IP66/67, NEMA 4X, UL Enclosure Type 4X
Housing material	Die cast aluminium and plastic casing
Agency Listing	cULus acc. to UL60730-1A/-2-14, CAN/CSA E60730-1:02, CE acc. to 2014/30/EU and 2014/35/EU
Noise level, motor	68 dB(A)
Servicing	maintenance-free
Quality Standard	ISO 9001
Weight	13 lb [5.8 kg]
Auxiliary switch	2 x SPDT, 3 A resistive (0.5 A inductive) @ AC 250 V, one set at 10°, one adjustable 0...90°
Communication	BACnet MS/TP
Passive Sensor Inputs	2x (Pt1000, Ni1000, NTC10k2)

Application

PR Series valve actuators are designed with an integrated linkage and visual position indicators. For outdoor applications, the installed valve must be mounted with the actuator at or above horizontal. For indoor applications the actuator can be in any location including directly under the valve.

Operation

The PR series actuator provides 90° of rotation and a visual indicator shows the position of the valve. The PR Series actuator uses a low power consumption brushless DC motor and is electronically protected against overload. A universal power supply is furnished to connect supply voltage in the range of AC 24...240 V and DC 24...125 V. Included is a smart heater with thermostat to eliminate condensation. Two auxiliary switches are provided; one set at 10° open and the other is field adjustable. Running time is field adjustable from 30...120 seconds by using the Near Field Communication (NFC) app and a smart phone.

†Use 60°C/75°C copper wire size range 12...28 AWG, stranded or solid. Use flexible metal conduit. Push the listed conduit fitting device over the actuator's cable to butt against the enclosure. Screw in conduit connector. Jacket the actuators input wiring with listed flexible conduit. Properly terminate the conduit in a suitable junction box. Rated impulse Voltage 4000 V. Type of action 1. Control pollution degree 3.

Date created, 02/24/2020 - Subject to change. © Belimo Aircontrols (USA), Inc.

Wiring Diagrams

- Meets cULus requirements without the need of an electrical ground connection.
- UP Universal Power Supply (UP) models can be supplied with 24 VAC up to 240 VAC, or 24 VDC up to 240 VDC.
- Disconnect power.
- 1 Provide overload protection and disconnect as required.
- 4 Two built-in auxiliary switches (2x SPDT), for end position indication, interlock control, fan startup, etc.
- 5 Only connect common to negative (-) leg of control circuits.
- 46 Actuators may be controlled in parallel. Current draw and input impedance must be observed.
- ! ***WARNING! LIVE ELECTRICAL COMPONENTS!***
  During installation, testing, servicing and troubleshooting of this product, it may be necessary to work with live electrical components. Have a qualified licensed electrician or other individual who has been properly trained in handling live electrical components perform these tasks. Failure to follow all electrical safety precautions when exposed to live electrical components could result in death or serious injury.

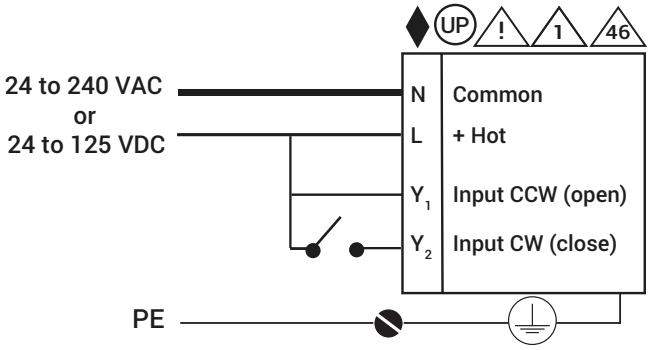

On/Off

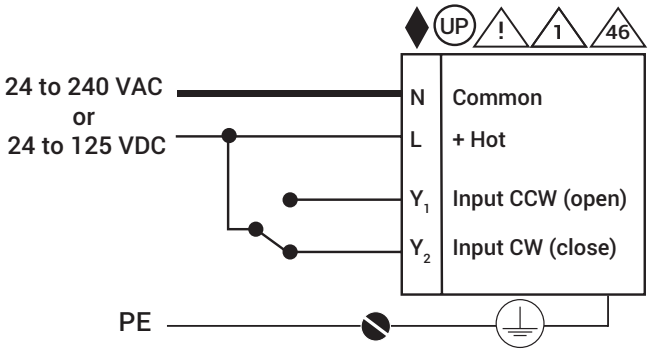

On/Off

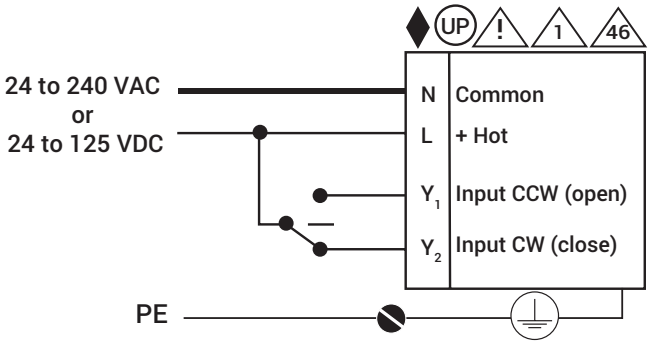

Floating Point

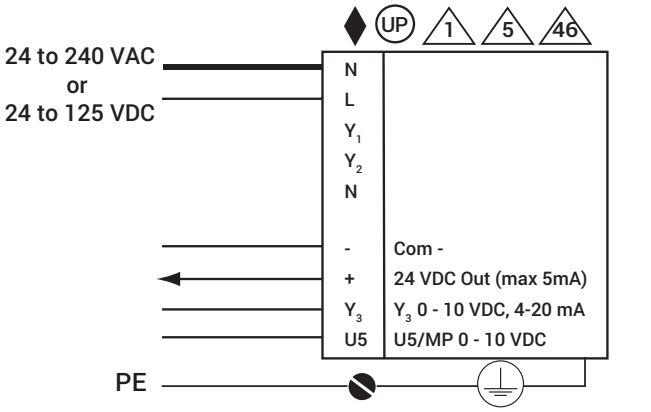

Modulating

Date created, 02/24/2020 - Subject to change. © Belimo Aircontrols (USA), Inc.

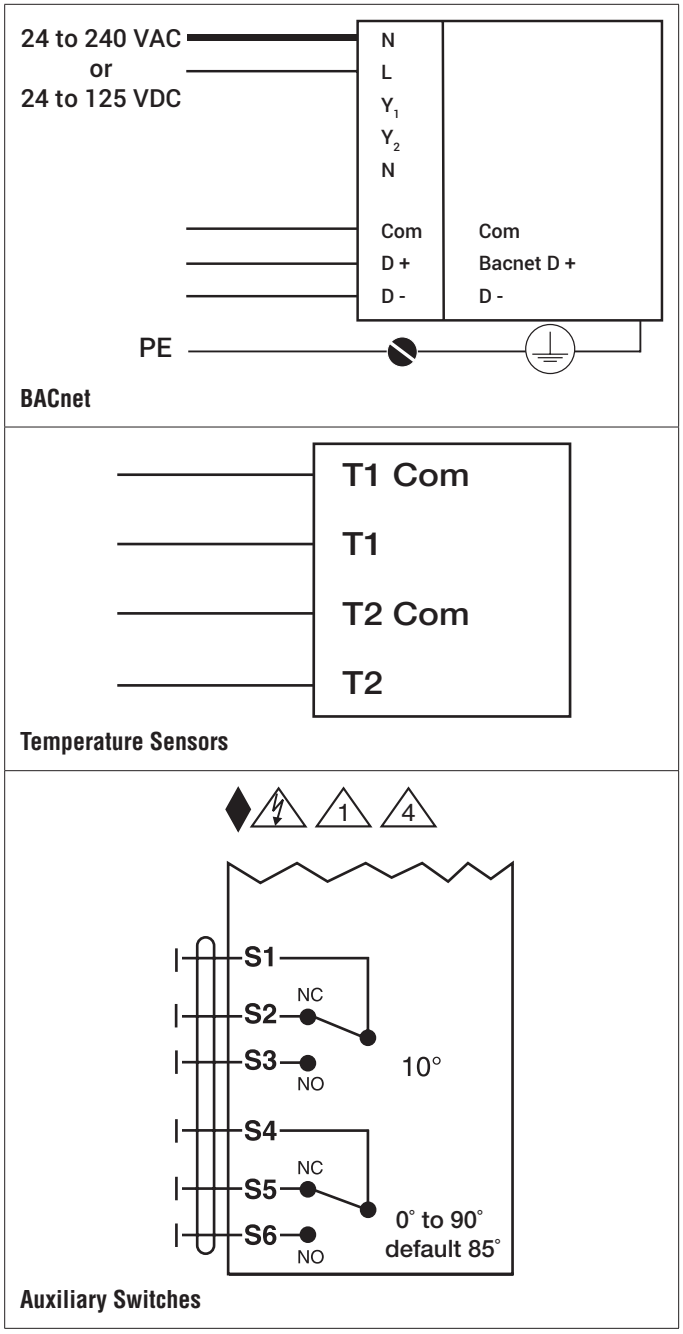

Date created, 02/24/2020 - Subject to change. © Belimo Aircontrols (USA), Inc.